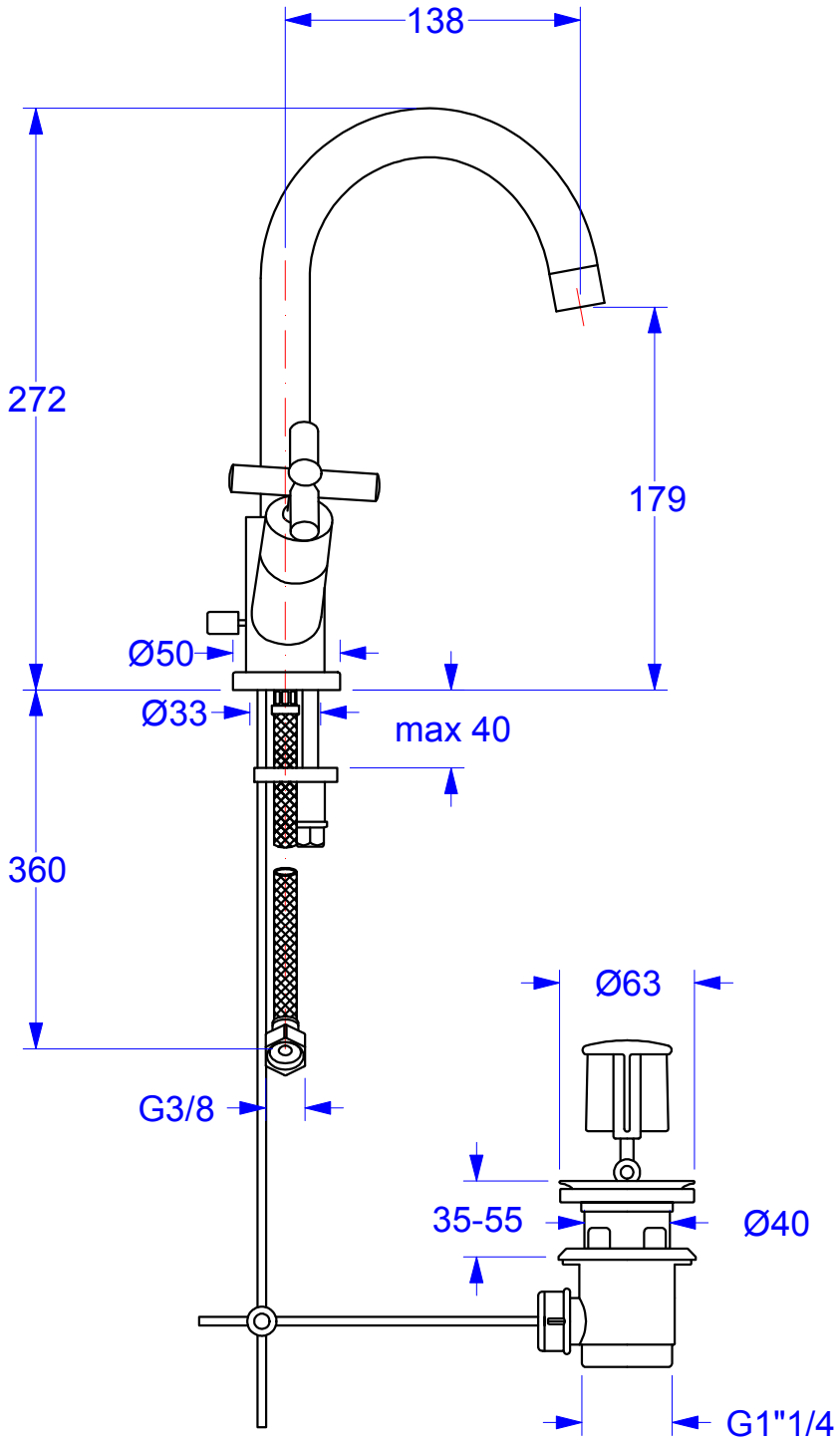

DRAWN Maurizio Amato	2018-01-15	aquatica® PLUMBING			
CHECKED		TITLE			
QA		Celine-S-226 by Aquatica			
APPROVED					
		SIZE C		DWG NO	REV
		SCALE		SHEET 1 OF 1	